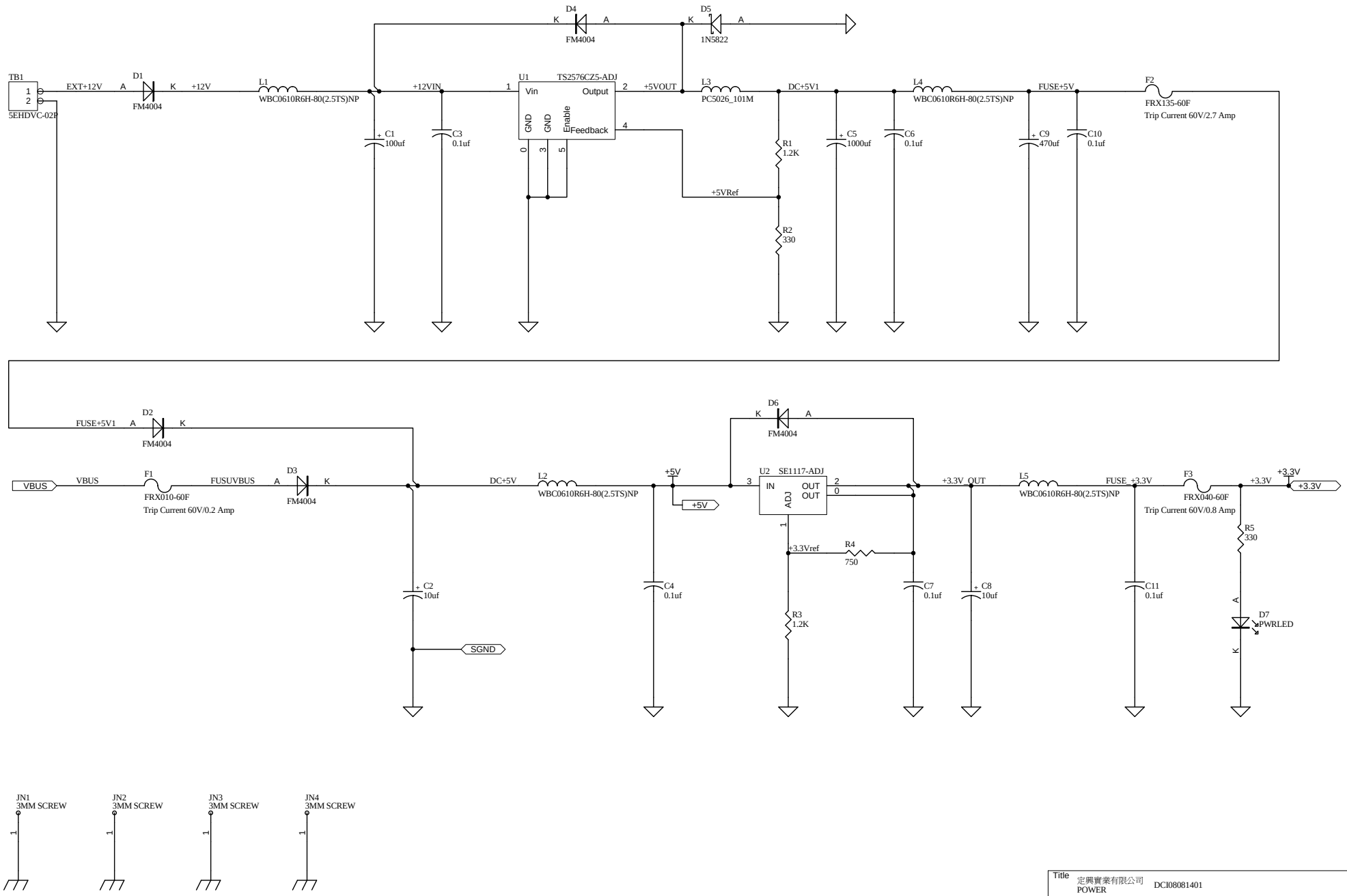

Title	定興實業有限公司 POWER	DCI08081401	
Size A3	Number 臺北市松山區民生東路五段36巷4弄31號4F 02-27665753		Revision V1.00
Date: 2008/12/29		Sheet 2 of 6	
File: F:\DECISION\..\USB_8255_8254_01.SchDoc		Drawn By: 劉名勤	